OPERATOR'S MANUAL

WF-7910 SERIES 12V POWER CONVERTER ACCESSORY

WF-7910 | WF-7910-Q | WF-7910-WAGO

The Power Converter Accessory model number is located inside the door panel.

THE HEARTBEAT OF TODAY'S RVS

ARTERRA DISTRIBUTION
(877) 294-8997
wfcoelectronics.com

WARRANTY
warranty@wfcoelectronics.com
Fax (574) 294-8698

Distributed by Arterra in the U.S.A. and Canada

TABLE OF CONTENTS

SAFETY INFORMATION 1

GENERAL INFORMATION
Reverse Battery Protection 1
Blown Fuse Indicators 1

CIRCUIT PROTECTION
DC Fuses 2

INSTALLATION INSTRUCTIONS
Mounting the Enclosure 2
Wiring the DC Fuse Board 3

TROUBLESHOOTING INSTRUCTIONS
Check Converter or Battery Input Voltage 4-5
Blown Fuse Indicators 5

GENERAL COMPLIANCE INFORMATION
Agency Listings 6

CONSUMER LIMITED WARRANTY 6

CONSUMER WARRANTY CLAIM PROCEDURE 7

WARRANTY ASSISTANCE 7

⚠WARNING

RISK OF ELECTRICAL SHOCK
Disconnect or isolate all power supplies before making electrical connections. More than one disconnection or isolation may be required to completely de-energize equipment. Contact with components carrying hazardous voltage can cause electric shock and may result in severe personal injury or death.

NOTICE

All wiring must conform to local, national, and regional regulations. Use copper conductors only for all wire connections. Do not exceed the electrical ratings for the WF-7910 Series as this could cause equipment failure and/or electrical shock which may result in severe personal injury or death.

⚠CAUTION

INSTALLATION AND SERVICING
This product should be installed and serviced by a certified or licensed electrician familiar with applicable safety codes and installation requirements. Failure to observe this precaution could result in electrical shock or bodily injury. Consult your servicing dealer before attmpting any work on this product.

⚠WARNING

SPARK HAZZARD
This unit employs components that can produce arcs or sparks. To prevent fire or explosion, do not install in compartments containing batteries or flammable materials (LP gas). This product is NOT ignition protected.

GENERAL INFORMATION
WF-7910 Series 12V Power Converter Accessory Safety Features

REVERSE BATTERY PROTECTION
The WF-7910 Series 12V Power Converter Accessory DOES NOT have a converter installed within the enclosure. Power is supplied to the WF-7910 Series 12V Power Converter Accessory from an external converter/charger, WF-9800 Series Converter/Charger for example, located elsewhere in the RV. Reverse Battery Protection will be provided by that unit. Consult that converter/charger's manual for location and replacement instructions.

BLOWN FUSE INDICATORS ON DC FUSE BOARD
The DC Fuse Board has individual blown fuse indicators as standard equipment. The WF-7910 and WF-7910-Q 12V Power Converter Accessory has 20 DC circuits and the WF-7910-WAGO 12V Power Converter Accessory has **18** DC circuits. Each of the circuits contain a Red LED to indicate a blown fuse. If one of the circuits draws more current than the rating of the fuse, the fuse will blow. When this occurs, the Red LED for that circuit will illuminate. **NOTE:** The fuse board employs surface mount LEDs which are barely visible to the naked eye. Replace the blown fuse with a known good fuse of the same rating. NOTE: If the replacement fuse blows again, check that circuit for a short or overload condition.

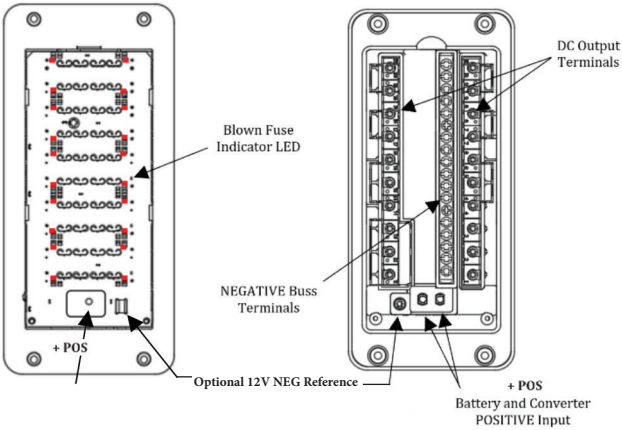

CIRCUIT PROTECTION
WF-7910 Series 12V Power Converter Accessory Fuses

DC FUSES (12 VOLTS)

Should any fuse blow, the fuse should be replaced with ATC or ATO automotive type fuse such as:

- Littelfuse type 257
- Bussmann type ATC

INSTALLATION INSTRUCTIONS
Installing the WF-7910 Series Power Converter Accessory

MOUNTING THE ENCLOSURE

The WF-7910 Series 12V Power Converter Accessory enclosure should be mounted in an accessible area such as a wall or inside a cabinet and close to the battery (batteries) when possible. Select a mounting location that is appropriate to prevent excessive heat, water, moisture, dust, and dirt entering the unit once installed.

Cut an opening 1/8" wider than the enclosure to allow the Power Converter Accessory to slide in easily. The rough opening is 7 9/32" W x 4 11/32" H. The enclosure is 3 3/8" deep. Be sure to allow enough space behind the unit for wiring. After wiring is completed, the enclosure fastens to the wall or cabinet using 4 wood screws (not supplied).

⚠WARNING

RISK OF ELECTRICAL SHOCK

Disconnect or isolate all power supplies before making electrical connections. More than one disconnection or isolation may be required to completely de-energize equipment. Contact with components carrying hazardous voltage can cause electric shock and may result in severe personal injury or death.

WIRING THE DC FUSE BOARD

Make sure the converter/charger is OFF and the house battery is disconnected before beginning the DC wiring. Determine what DC loads are to be connected to the fuse board and what position they will occupy. For the WF-7910 and WF-7910-Q models, any of the fuse circuits can be used for slide-outs or other higher current loads and can have a maximum 30 Amp ATO or ATC fuse installed. As for the WF-7910-WAGO model, there are **4** available circuits that can be used for slide-outs or other higher current loads and can have a maximum 30 Amp ATO or ATC fuse installed, while the remaining 14 circuits are general purpose and can have up to a 20 Amp ATO or ATC fuse installed. Make sure the fuses are seated properly.

NOTE: Fused circuit loads shall not exceed the maximum circuit board rating of 160Amps DC. For all models having lug screw connections, strip approximately 1/4" of insulation from the DC load wires and insert the wire into the appropriate lug. Tighten the lug screw to the torque spec found in the table below. Make sure all connections are tightly secured.

NOTE: DC power coming to the WF-7910 Series 12V Power Converter Accessory needs to have the correct size fuse (160A maximum) for the gauge of wire and could be routed in one of two ways.

1. Power could be coming directly into the WF-7910 Series 12V Power Converter Accessory fuse board from the converter/charger. The battery (if supplied) would also connect to the fuse board.
2. Power from the converter charger would be connected directly to the battery. A cable from the battery would be connected to the fuse boards input lugs.

WE'LL USE THE FIRST CONNECTION METHOD IN OUR DISCUSSION BELOW

Connect the heavy Positive wire coming from the converter/charger to one of the POS+ larger lugs of the fuse board. In a similar fashion, connect the heavy Negative wire from the converter/charger to the NEG- buss bar mounted on back up to 4 AWG. Make sure the lugs are tightened to the specs in the torque chart located on the inside of the door assembly. Connect the battery Positive cable to the remaining POS+ large lug making sure it is torqued properly. The Negative battery lead will be connected to the buss bar mounted on back up to 4 AWG.

As a last step, any DC negative leads should be connected to the rear Negative bus bar located on the back of the panel.

Terminal Description	Max Temperature (°C)	Torque - (in.-lbs.)	Wire Gauges - (AWG)
Terminal Bars - Neutral	90	25 30 35 40	10-14 AWG Wire 8 AWG Wire 6 AWG Wire 4 AWG Wire
DC Fuse Panel Lugs - POS+	75	25 32 45 50	10 AWG Wire 8 AWG Wire 6 AWG Wire 2-4 AWG Wire
DC - Single Circuit Terminals Optional 12 NEG Reference	75	15 20 25	14-16 AWG Wire 12 AWG Wire 10 AWG Wire

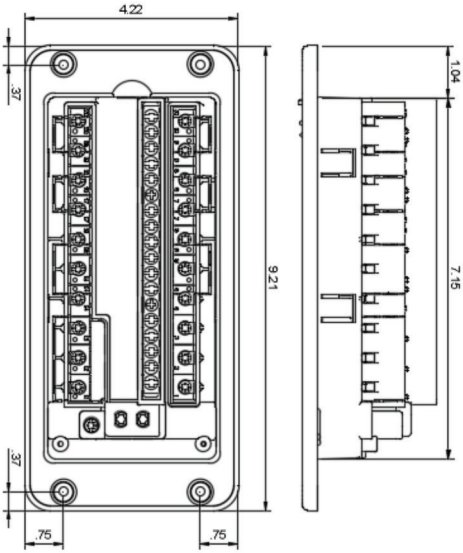

BACK VIEW SIDE VIEW

Dimensions are in inches.

FIGURE 2

TROUBLESHOOTING INSTRUCTIONS
Troubleshooting the WF-7910 Series Power Converter Accessory

Because the WF-7910 Series 12V Power Converter Accessory does not contain a converter/charger, troubleshooting will be limited to checking DC power coming into the unit and proper fuse board operation. See (figure 1) on page 4.

CHECK FOR CONVERTER OR BATTERY INPUT VOLTAGE

NOTE: Depending on how the RV manufacturer connected the DC power to the WF-7910 Series 12V Power Converter Accessory, it could have been routed in one of 2 ways.

1. Power could be coming directly into the WF-7910 Series 12V Power Converter Accessory fuse board from the converter/charger. The battery (if supplied) would also connect to the fuse board.
2. Power from the converter charger would be connected directly to the battery. And cables from the battery would be connected to the fuse board input lugs.

WE'LL USE THE FIRST CONNECTION METHOD IN OUR DISCUSSION BELOW

Make sure the WF-7910 Series 12V Power Converter Accessory is receiving DC power from the converter/charger or battery. First, check that the converter/charger is plugged into an AC source (105-130 VAC) and is operating. Check the converter input voltage with a voltmeter. Be sure you have good cable connections at the lugs. Place the meter probes on the lugs as follows; place the Positive (red) meter probe on the larger battery/converter + POS lug and place the Negative (black) meter probe on the NEG- lug buss bar.

If the voltage from the converter charger reads approximately 13.6 VDC (+/- 0.2) at the lugs, the fuse board is getting DC power.

If no converter/charger/battery input voltage is read at these lugs, check for an open inline fuse, or disconnect switch in circuit coming to the fuse board. One may have been installed by the RV manufacturer. Also check for any other loose wiring connections.

BLOWN FUSE INDICATORS ON DC FUSE BOARD

The DC Fuse Board has individual blown fuse indicators as standard equipment. Each circuit has a Red LED to indicate a blown fuse. **NOTE:** The fuse board employs surface mount LEDs which are barely visible to the naked eye. If one of the Red LEDs is illuminated, check for a blown fuse. If blown, replace the fuse with a known good fuse of the same rating. NOTE: If the replacement fuse blows again, check that circuit for a short or overload condition.

If, for some reason, one of the fuse board output circuits is connected to a load that has a switch that is turned OFF or an appliance that is turned OFF, the indicator LED will not illuminate even if the fuse is blown or removed from the fuse board. Turn the switch or appliance ON and re-check the fuse circuit with the fuse removed. If the LED remains OFF, check for a broken wire to the switch or appliance.

If an indicator LED remains illuminated with the known good fuse in place, check for possible damage to the fuse board at that location. If damage is found, the fuse board will need to be replaced.

If the above checks have been made but the problem cannot be resolved, contact the Arterra Distribution Power PROs at 1 (877) 294-8997. Before placing the call, please have available the WF-7910 Series Power Converter Accessory model number from the front panel label and the 14-digit serial number from the bar code tag located inside the enclosure.

Should it be determined that the fuse board of the WF-7910 Series 12V Power Converter Accessory is defective, and the unit is still under warranty, please return the complete WF-7910 Series 12V Power Converter Accessory.

The DC wires protruding from the back of the WF-7910 Series 12V Power Converter Accessory have been connected to the DC circuits in your RV by the RV manufacturer. When preparing the fuse board for return, label and disconnect each wire as it is removed from the fuse board lug. Follow the packaging instructions in your warranty claim packet.

GENERAL COMPLIANCE INFORMATION
Agency Listings

UL
The WF-7910 Series 12V Power Converter Accessorys are UL-Listed, and cUL-Listed (Canadian).

CONSUMER LIMITED WARRANTY
for WFCO Electronic Products

WFCO extends, to the original owner, a Two-Year Limited Product Warranty. This warranty is in effect from the date of original purchase for a period of two years. This limited warranty is extended specifically for and is limited to Recreational Vehicle application and is only valid within the continental United States, Alaska, Hawaii, and the Provinces of Canada. WFCO warrants, to the owner, that its products are free from defects in material and workmanship under normal use and service based on its intended use and function. This warranty is limited to the repair or replacement, at WFCO's discretion, of any defective parts or defective assembly. Any implied warranties of merchantability or fitness for intended use are limited in duration unless applicable State Law provides otherwise. You may have other rights as specified by each individual state.

EXCLUSIONS AND LIMITATIONS
The OEM warranty specifically does not apply to the following:

- Any WFCO product that has been repaired or altered by an unauthorized person.
- Any damage caused by misuse, faulty installation, testing, negligence, accident or any WFCO product installed in a commercial vehicle.
- Any WFCO product, whose serial number has been defaced, altered, or removed.
- Any WFCO product, whose installation has not been in accordance with the WFCO written instructions.
- Any consequential damages arising from the loss of use of the product including but not limited to inconvenience, loss of service, loss of revenue, loss or damage to personal property, cost of all services performed in removing or replacing the WFCO product. Specifications are subject to change without notice or obligation.
- Any WFCO Electronics products sold through unauthorized Internet sources (Example: eBay) will be excluded from all warranty coverage offered by Arterra Distribution / WFCO.

CONSUMER WARRANTY CLAIM PROCEDURE

Upon determination and validation by an authorized OEM dealer that a WFCO product has a defect, a Return Goods Authorization (RGA) number will be required before the product can be returned. The RGA number can be requested by completing the Warranty Information Fax Sheet and appropriate Troubleshooting Form found atwfcoelectronics.com. Once these forms have been completed, email the forms along with Proof of Purchase to warranty@wfcoelectronics.com or fax the three documents to the Warranty Department at (574) 294-8698. After receipt of the forms, an RGA number will be issued. This number shall appear on all correspondence with warranty service. Upon validation of the warranty, WFCO shall replace the product with a like product. The RGA number shall be placed on the outside of the carton used to return the product for ease of identification. Do not mark directly on the product. The product must be packaged properly to avoid further product damage which could cause a non-warrantable condition.

WARRANTY ASSISTANCE

The consumer may contact the selling Dealer or OEM for warranty assistance. The consumer may also contact Arterra Distribution, exclusive distributor of WFCO Products at: (574) 294-8997 or Fax (574) 294-8698.

THE **HEARTBEAT** OF TODAY'S RVS

ARTERRA DISTRIBUTION
(877) 294-8997
wfcoelectronics.com

WARRANTY
warranty@wfcoelectronics.com
Fax (574) 294-8698

Distributed by Arterra in the U.S.A. and Canada

EXPERT PRODUCT SUPPORT

Power PROs Technical Support
(877) 294-8997